ITEM NO.	DESCRIPTION	MATERIAL/ MATERIEL	QTY/ QTE	DRAWING/DESSIN NO. PART/PIECE NO.	WEIGHT/ POIDS KG	WEIGHT/ POIDS LBS
1	ROULEAU ACIER		1	BBRR525250835A4	14.3	31.5
2	SUPPORT DE ROULEAU		1	BBFR4030030	32.2	70.8
3	FIXATION EXTÉRIEURE		2	BBRCEB25	0.0	0.0
4	VIS AUTO-TARAUDEUSE		2	HABSLZINC005NC010	0.0	0.0

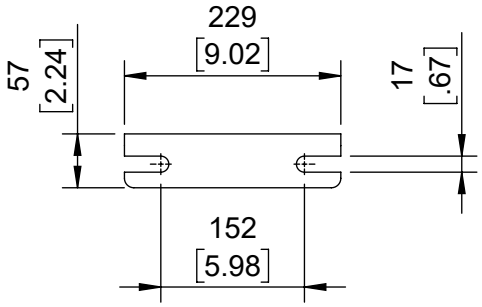

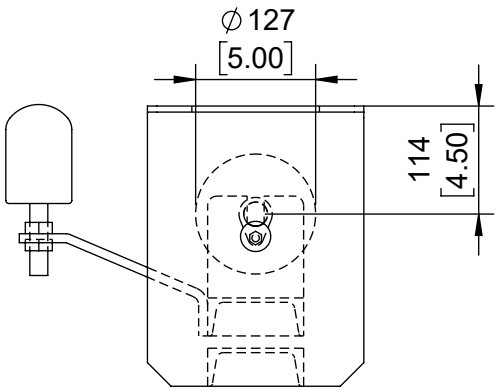

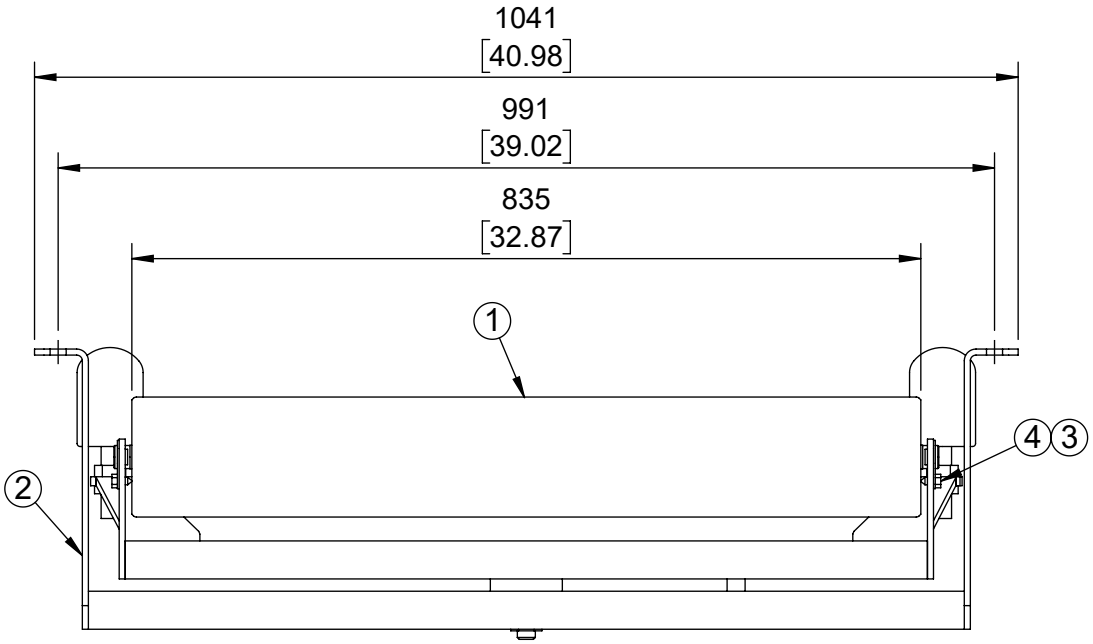

No.	REVISIONS	DATE	BY
0	ÉMIS POUR LA CONSTRUCTION	09-13-2021	AH

DO NOT SCALE
NE PAS PRENDRE A L'ECHELLE

DIMENSIONS ARE IN mm [INCHES]

SURFACE FINISH

SURFACE

THIRD ANGLE PROJECTION
PROJECTION TROISIEME ANGLE

This drawing is the exclusive and confidential property of Continental Conveyor and Machine Works Ltd.

Ce dessin est la propriete confidentielle et exclusive de Convoyeur Continental et Usinage Ltee.

Drawn/Dessine	Checked/Verifie	Approved/Approuve	Napanee Job No./Contrat No.
AH			
Date (MM-DD-YYYY) 09-13-2021	Scale/Echelle 1:8	Weight/Poids Net 102.3 Lbs	Thetford Job No./Contrat No.

Identification No.

continental

CONTINENTAL CONVEYOR & MACHINE WORKS LTD.
CONVOYEUR CONTINENTAL & USINAGE LTEE.
THETFORD MINES, QUEBEC, CANADA
NAPANEE, ONTARIO, CANADA

STANDARD

STATION INFERIEURE PLAT AUTOCENTREUR

LARGEUR DE BANDE 30" ROULEAU Ø5" ARBRE Ø25mm CEMA C5

Format.	Drawing No./Dessin No.	Revision
A	BB-40300-5-30	0