MATERIAL LIST / LISTE DE MATERIEL

(Designations of pieces in Imperial, dimensions in millimeters unless otherwise specified)
(Désignations des pièces en Impérial, dimensions en millimètre sauf indication contraire)

ITEM NO.	DESCRIPTION	MATERIAL/ MATERIEL	QTY/ QTE	DRAWING/DESSIN NO. PART/PIECE NO.	WEIGHT/ POIDS KG	WEIGHT/ POIDS LBS
1	ROULEAU ACIER		3	BBTR525250389A4	22.0	48.3
2	SUPPORT DE ROULEAU, TYPE RÉGLABLE 5-30°		1	BBFR4063542-30DEG	30.1	66.2
3	FIXATION EXTÉRIEURE		6	BBRCEB25	0.0	0.0
4	VIS AUTO-TARAUDEUSE		6	HABSLZINC005NC010	0.0	0.0

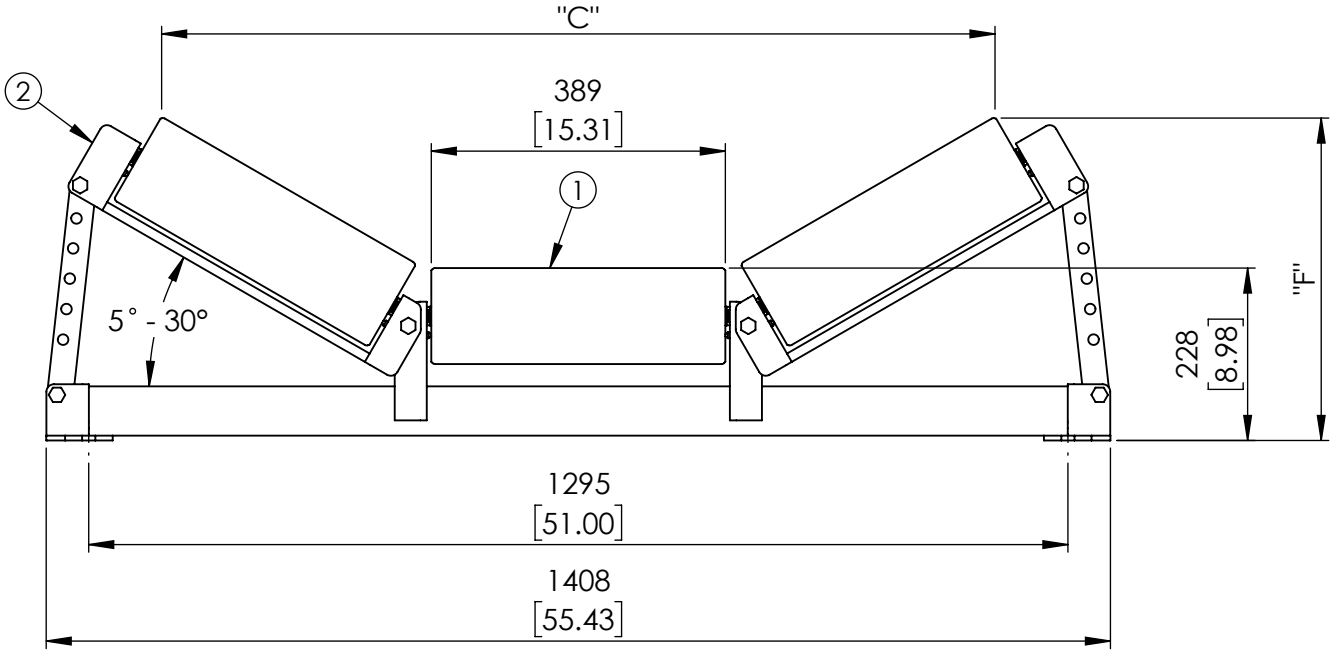

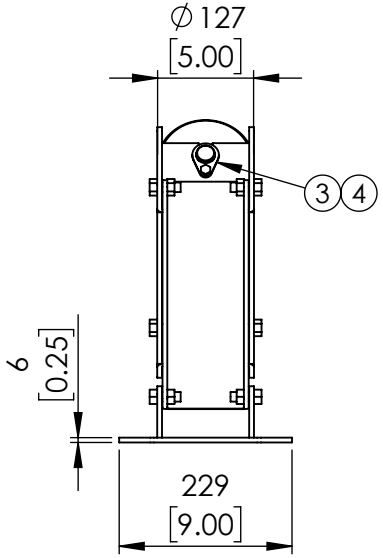

	5°	10°	15°	20°	25°	30°
C	1275mm	1252mm	1223mm	1188mm	1148mm	1102mm
	50.20''	49.29''	48.15''	46.77''	45.20''	43.39''
F	264mm	300mm	334mm	367mm	399mm	428mm
	10.39''	11.81''	13.15''	14.45''	15.71''	16.85''

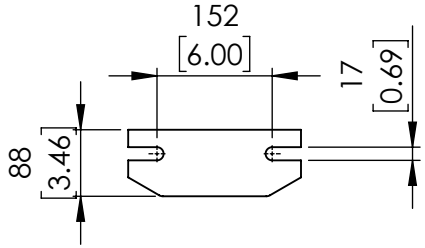

No.	REVISIONS	DATE	BY
0	ÉMIS POUR LA CONSTRUCTION	05-25-2022	AH

DO NOT SCALE
NE PAS PRENDRE A L'ECHELLE

DIMENSIONS ARE IN mm [INCHES]

SURFACE FINISH

SURFACE

THIRD ANGLE PROJECTION
PROJECTION TROISIEME ANGLE

This drawing is the exclusive and confidential property of Continental Conveyor and Machine Works Ltd.

Ce dessin est la propriete confidentielle et exclusive de Convoyeur Continental et Usinage Ltee.

Drawn/Dessine	Checked/Verifie	Approved/Approuve	Napanee Job No./Contrat No.
AH			
Date (MM-DD-YYYY) 05-25-2022	Scale/Echelle 1:10	Weight/Poids Net 114.9 Lbs	Thetford Job No./Contrat No.

Identification No.

continental

CONTINENTAL CONVEYOR & MACHINE WORKS LTD.
CONVOYEUR CONTINENTAL & USINAGE LTEE.
THETFORD MINES, QUEBEC, CANADA
NAPANEE, ONTARIO, CANADA

STANDARD

STATION SUPÉRIEURE, TYPE AUGE RÉGLABLE

LARGEUR DE BANDE 42" ROULEAU Ø5" ARBRE Ø25mm CEMA C5

Format	Drawing No./Dessin No.	Revision
A	BB-40635-5-42	0