MATERIAL LIST / LISTE DE MATERIEL

(DESIGNATIONS OF PIECES IN IMPERIAL, DIMENSIONS IN MILLIMETERS UNLESS OTHERWISE SPECIFIED)
(DÉSIGNATIONS DES PIÈCES EN IMPÉRIAL, DIMENSIONS EN MILLIMÈTRE SAUF INDICATION CONTRAIRE)

ITEM NO.	DESCRIPTION	MATERIAL/ MATERIEL	QTY/ QTE	DRAWING/DESSIN NO. PART/PIECE NO.	WEIGHT/ POIDS KG	WEIGHT/ POIDS LBS
1	ROULEAU ACIER		1	BBRR625301292A5	31.7	69.8
2	SUPPORT DE ROULEAU		1	BBFR4030048	57.2	125.9
3	FIXATION EXTÉRIEURE		2	BBRCEB25	0.0	0.0
4	VIS AUTO-TARAUDEUSE		2	HABSLZINC005NC010	0.0	0.0

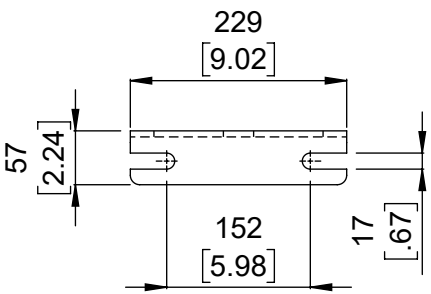

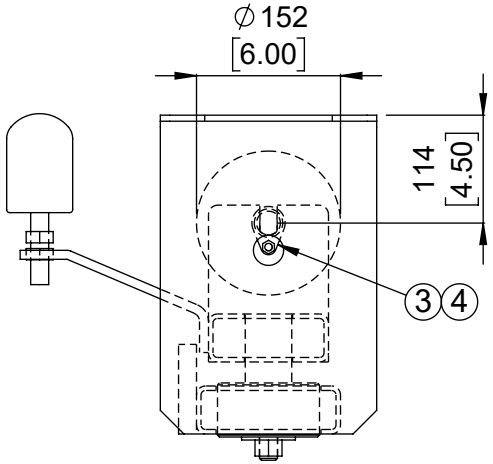

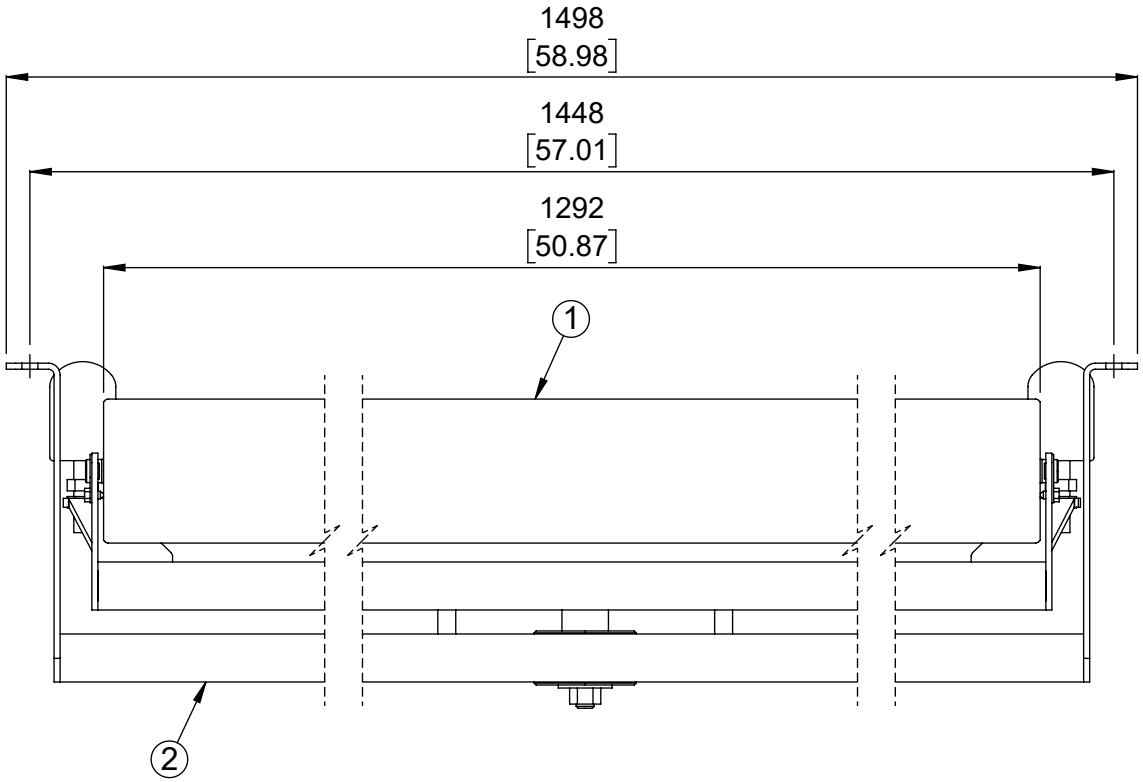

No.	REVISIONS	DATE	BY
0	ÉMIS POUR LA CONSTRUCTION	11-29-2024	AH

DO NOT SCALE
NE PAS PRENDRE A L'ECHELLE

DIMENSIONS ARE IN mm [INCHES]

SURFACE FINISH √ SURFACE

THIRD ANGLE PROJECTION
PROJECTION TROISIEME ANGLE

This drawing is the exclusive and confidential property of Continental Conveyor and Machine Works Ltd.

Ce dessin est la propriete confidentielle et exclusive de Convoyeur Continental et Usinage Ltee.

Drawn/Dessine	Checked/Verifie	Approved/Approuve	Napanee Job No./Contrat No.
AH			
Date (MM-DD-YYYY) 11-29-2024	Scale/Echelle 1:8	Weight/Poids Net 195.8 Lbs	Thetford Job No./Contrat No.

Identification No.

continental

CONTINENTAL CONVEYOR & MACHINE WORKS LTD.
CONVOYEUR CONTINENTAL & USINAGE LTEE.
THETFORD MINES, QUEBEC, CANADA
NAPANEE, ONTARIO, CANADA

STANDARD

STATION INFERIEURE PLAT AUTOCENTREUR
LARGEUR DE BANDE 48" ROULEAU Ø6" ARBRE Ø25mm CEMA D6

Format.	Drawing No./Dessin No.	Revision
A	BB-40300-6-48	0