MATERIAL LIST / LISTE DE MATERIEL

(DESIGNATIONS OF PIECES IN IMPERIAL, DIMENSIONS IN MILLIMETERS UNLESS OTHERWISE SPECIFIED)
(DÉSIGNATIONS DES PIÈCES EN IMPÉRIAL, DIMENSIONS EN MILLIMÈTRE SAUF INDICATION CONTRAIRE)

ITEM NO.	DESCRIPTION	MATERIAL/ MATERIEL	QTY/ QTE	REMARK	WEIGHT/ POIDS KG	WEIGHT/ POIDS LBS
1	TROUGHING ROLL		3	BBTR525300389A4-D	24.0	52.8
2	5-30° ADJUSTABLE IDLER FRAME		1	BBFR4063542	30.1	66.2
3	RETAINING END CLIP		6	BBRCEB25	0.0	0.0
4	SELF TAPPING HEX SCREW		6	HABSLZINC005NC010	0.0	0.0

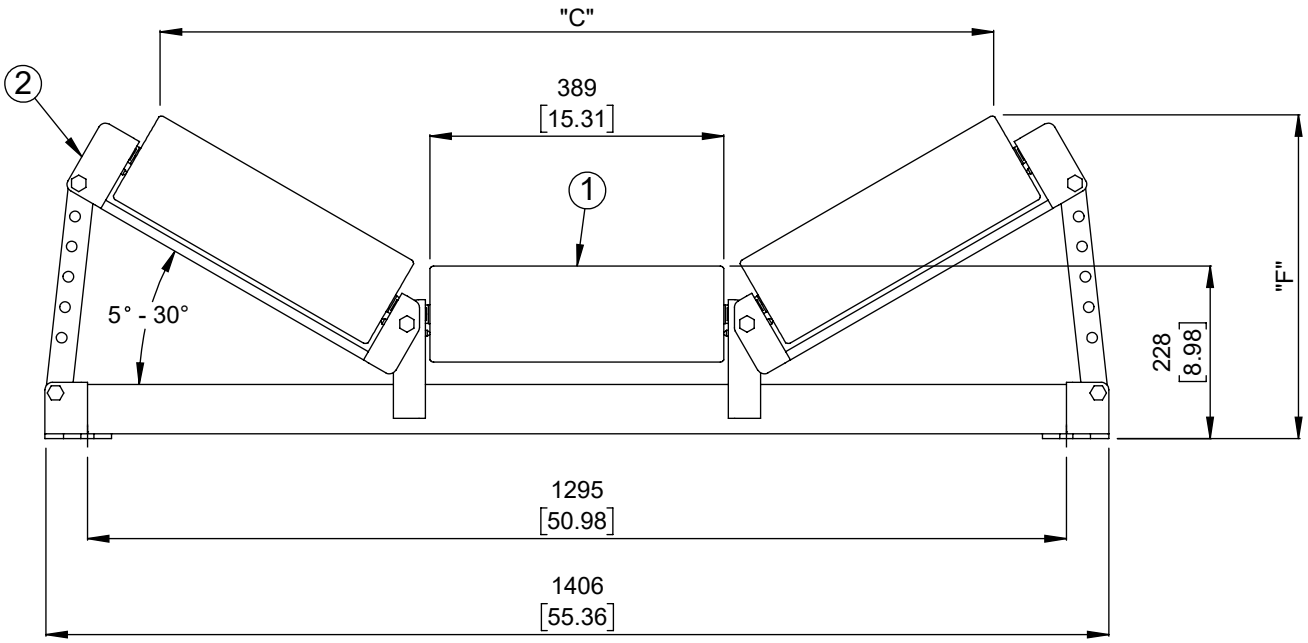

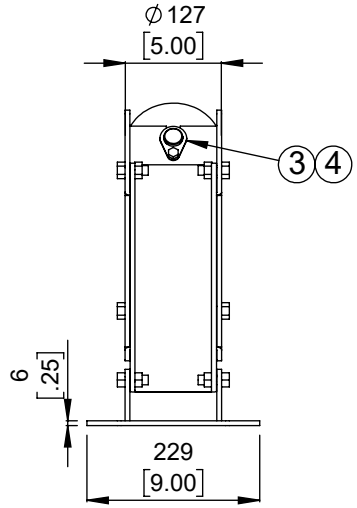

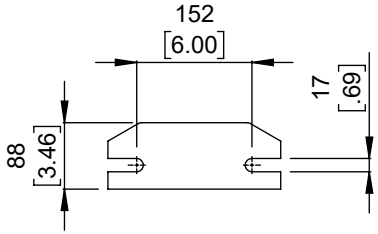

	5°	10°	15°	20°	25°	30°
C	1275 mm	1252 mm	1224 mm	1189 mm	1148 mm	1102 mm
	50.21"	49.31"	48.17"	46.80"	45.21"	43.41"
F	264 mm	300 mm	334 mm	367 mm	399 mm	428 mm
	10.41"	11.81"	13.17"	14.47"	15.70"	16.86"

No.	REVISIONS	DATE	BY
0	ISSUED FOR CONSTRUCTION	12-06-2024	AH

DO NOT SCALE
NE PAS PRENDRE A L'ECHELLE

DIMENSIONS ARE IN mm [INCHES]

SURFACE FINISH
FINITION SURFACE

THIRD ANGLE PROJECTION
PROJECTION TROISIEME ANGLE

This drawing is the exclusive and confidential property of Continental Conveyor and Machine Works Ltd.

Ce dessin est la propriete confidentielle et exclusive de Convoyeur Continental et Usinage Ltee.

Drawn/Dessine	Checked/Verifie	Approved/Approuve	Napanee Job No./Contrat No.
AH			
Date (MM-DD-YYYY) 12-06-2024	Scale/Echelle 1:10	Weight/Poids Net 119.4 Lbs	Thetford Job No./Contrat No.

Identification No.

continental

CONTINENTAL CONVEYOR & MACHINE WORKS LTD.
CONVOYEUR CONTINENTAL & USINAGE LTEE.
THETFORD MINES, QUEBEC, CANADA
NAPANEE, ONTARIO, CANADA

STANDARD

5° - 30° ADJUSTABLE TROUGHING IDLER
42" BELT WIDTH ∅5" ROLL 25/30mm SHAFT CEMA D5 DUTY

Format.	Drawing No./Dessin No.	Revision
A	BB-40635-5-42D	0