MATERIAL LIST / LISTE DE MATERIEL

(DESIGNATIONS OF PIECES IN IMPERIAL, DIMENSIONS IN MILLIMETERS UNLESS OTHERWISE SPECIFIED)
(DÉSIGNATIONS DES PIÈCES EN IMPÉRIAL, DIMENSIONS EN MILLIMÈTRE SAUF INDICATION CONTRAIRE)

ITEM NO.	DESCRIPTION	MATERIAL/ MATERIEL	QTY/ QTE	DRAWING/DESSIN NO. PART/PIECE NO.	WEIGHT/ POIDS KG	WEIGHT/ POIDS LBS
1	ROULEAU AMORTISSEUR		3	BBIR525250330A5	23.2	51.0
2	SUPPORT DE ROULEAU 20°		1	BBFR4002036	15.6	34.3
3	FIXATION EXTÉRIEURE		2	BBRCEB25	0.0	0.0
4	VIS AUTO-TARAUDEUSE		2	HABSLZINC005NC010	0.0	0.0
5	FIXATION INTÉRIEURE		2	BBRCCB35	0.0	0.0

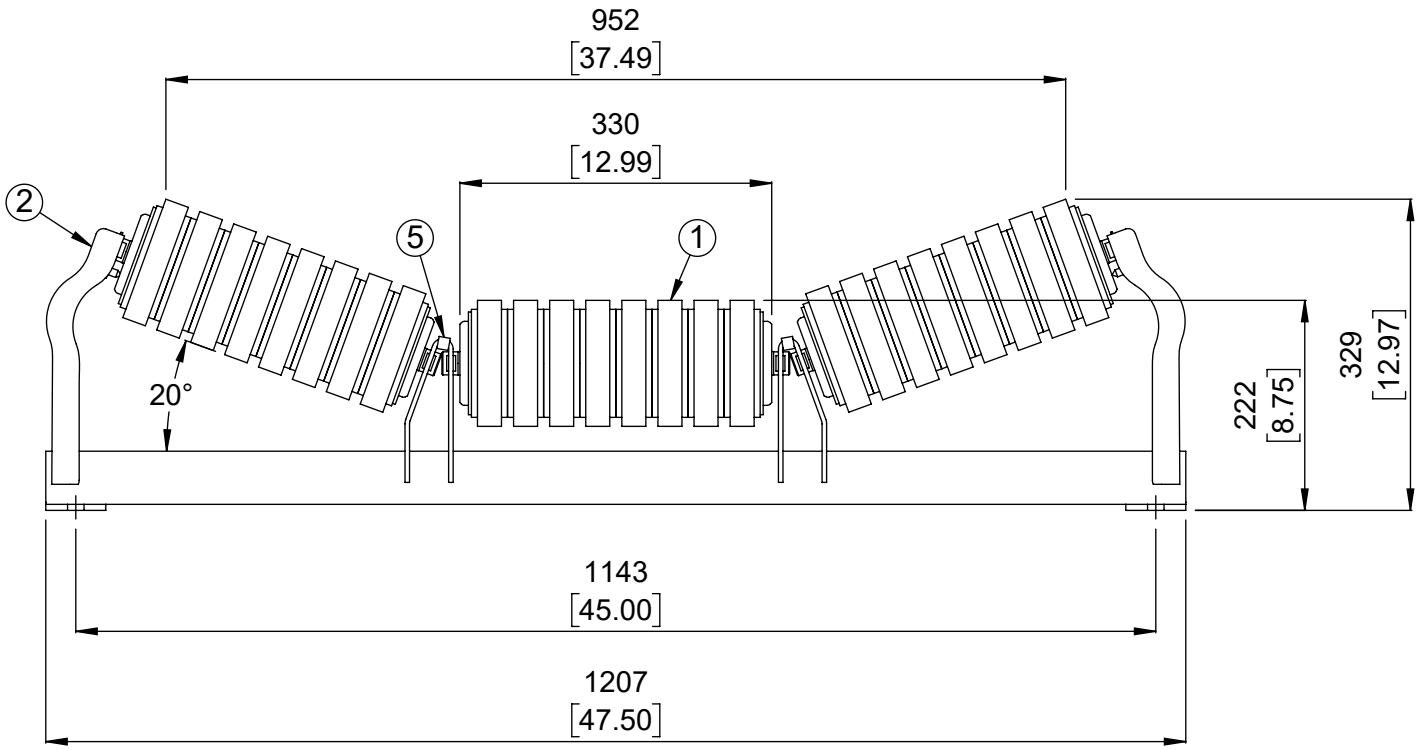

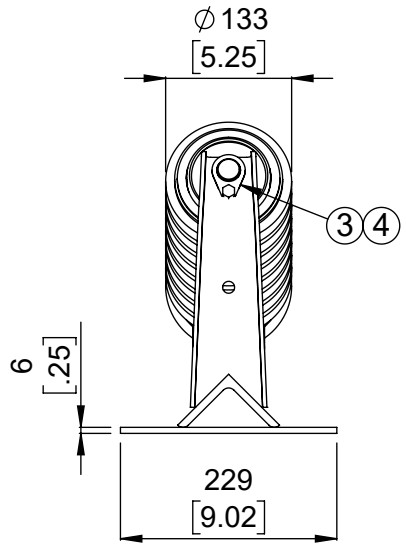

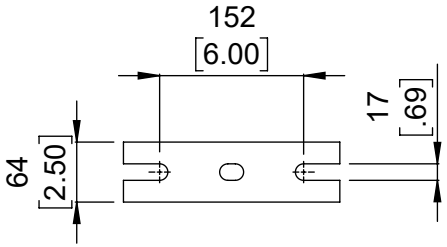

No.	REVISIONS	DATE	BY
0	ÉMIS POUR LA CONSTRUCTION	10-18-2024	AH

DO NOT SCALE
NE PAS PRENDRE A L'ECHELLE

DIMENSIONS ARE IN mm [INCHES]

SURFACE FINISH
SURFACE

THIRD ANGLE PROJECTION
PROJECTION TROISIEME ANGLE

This drawing is the exclusive and confidential property of Continental Conveyor and Machine Works Ltd.

Ce dessin est la propriete confidentielle et exclusive de Convoyeur Continental et Usinage Ltee.

Drawn/Dessine	Checked/Verifie	Approved/Approuve	Napanee Job No./Contrat No.
AH			
Date (MM-DD-YYYY) 10-18-2024	Scale/Echelle 1:8	Weight/Poids Net 82.3 Lbs	Thetford Job No./Contrat No.
Identification No.			

continental

CONTINENTAL CONVEYOR & MACHINE WORKS LTD.
CONVOYEUR CONTINENTAL & USINAGE LTEE.
THETFORD MINES, QUEBEC, CANADA
NAPANEE, ONTARIO, CANADA

STANDARD

STATION SUPÉRIEURE AMORTISSEUR AUGE 20°
LARGEUR DE BANDE 36" ROULEAU Ø5-1/4" ARBRE Ø25mm CEMA C5

Format.	Drawing No./Dessin No.	Revision
A	BB-43020-5-36	0