MATERIAL LIST / LISTE DE MATERIEL

(DESIGNATIONS OF PIECES IN IMPERIAL, DIMENSIONS IN MILLIMETERS UNLESS OTHERWISE SPECIFIED)
(DÉSIGNATIONS DES PIÈCES EN IMPÉRIAL, DIMENSIONS EN MILLIMÈTRE SAUF INDICATION CONTRAIRE)

ITEM NO.	DESCRIPTION	MATERIAL/ MATERIEL	QTY/ QTE	REMARK	WEIGHT/ POIDS KG	WEIGHT/ POIDS LBS
1	TROUGHING ROLL		2	BBTR520200581A4	18.2	40.0
2	10° V-RETURN IDLER FRAME		1	BBFR3051042	18.6	41.0
3	RETAINING END CLIP		4	BBRCEB20	0.0	0.0
4	SELF TAPPING HEX SCREW		4	HABSLZINC005NC010	0.0	0.0

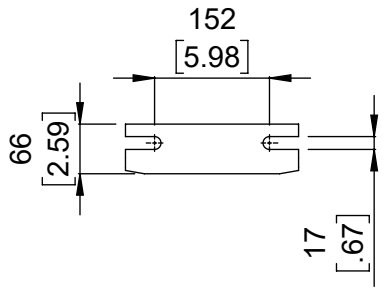

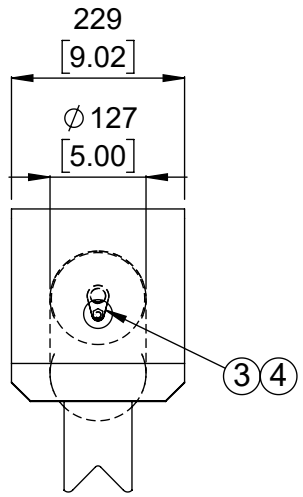

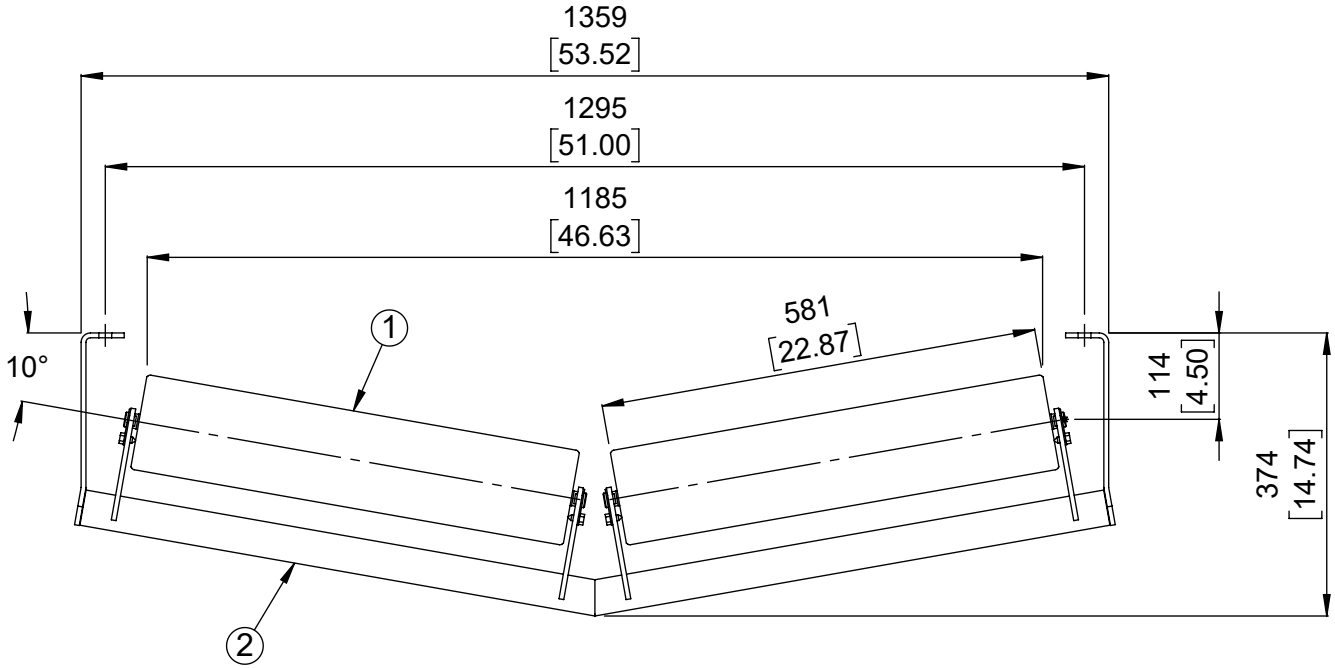

No.	REVISIONS	DATE	BY
0	ISSUED FOR CONSTRUCTION	05-07-2025	AH

DO NOT SCALE
NE PAS PRENDRE A L'ECHELLE

DIMENSIONS ARE IN mm [INCHES]

SURFACE FINISH √ SURFACE

THIRD ANGLE PROJECTION
PROJECTION TROISIEME ANGLE

This drawing is the exclusive and confidential property of Continental Conveyor and Machine Works Ltd.

Ce dessin est la propriete confidentielle et exclusive de Convoyeur Continental et Usinage Ltee.

Drawn/Dessine	Checked/Verifie	Approved/Approuve	Napanee Job No./Contrat No.
AH			
Date (MM-DD-YYYY) 05-07-2025	Scale/Echelle 1:10	Weight/Poids Net 81.2 Lbs	Thetford Job No./Contrat No.

Identification No.

continental

CONTINENTAL CONVEYOR & MACHINE WORKS LTD.
CONVOYEUR CONTINENTAL & USINAGE LTEE.
THETFORD MINES, QUEBEC, CANADA
NAPANEE, ONTARIO, CANADA

STANDARD

10° V-RETURN IDLER

42" BELT WIDTH ∅5" ROLL 20/20mm SHAFT 30,000 SERIES

Format.	Drawing No./Dessin No.	Revision
A	BB-30510-5-42	0