MATERIAL LIST / LISTE DE MATERIEL

(Designations of pieces in Imperial, dimensions in millimeters unless otherwise specified)
(Désignations des pièces en Impérial, dimensions en millimètre sauf indication contraire)

ITEM NO.	DESCRIPTION	MATERIAL/ MATERIEL	QTY/ QTE	DRAWING/DESSIN NO. PART/PIECE NO.	WEIGHT/ POIDS KG	WEIGHT/ POIDS LBS
1	ROULEAU ACIER		3	BBTR520200389A6SC	27.3	60.0
2	SUPPORT DE ROULEAU 45°		1	BBFR30D4542	16.8	37.0
3	FIXATION EXTÉRIEURE		2	BBRCEB20	0.0	0.0
4	VIS AUTO-TARAUDEUSE		2	HABSLZINC005NC010	0.0	0.0
5	FIXATION INTÉRIEURE		2	BBRCCB35	0.1	0.2

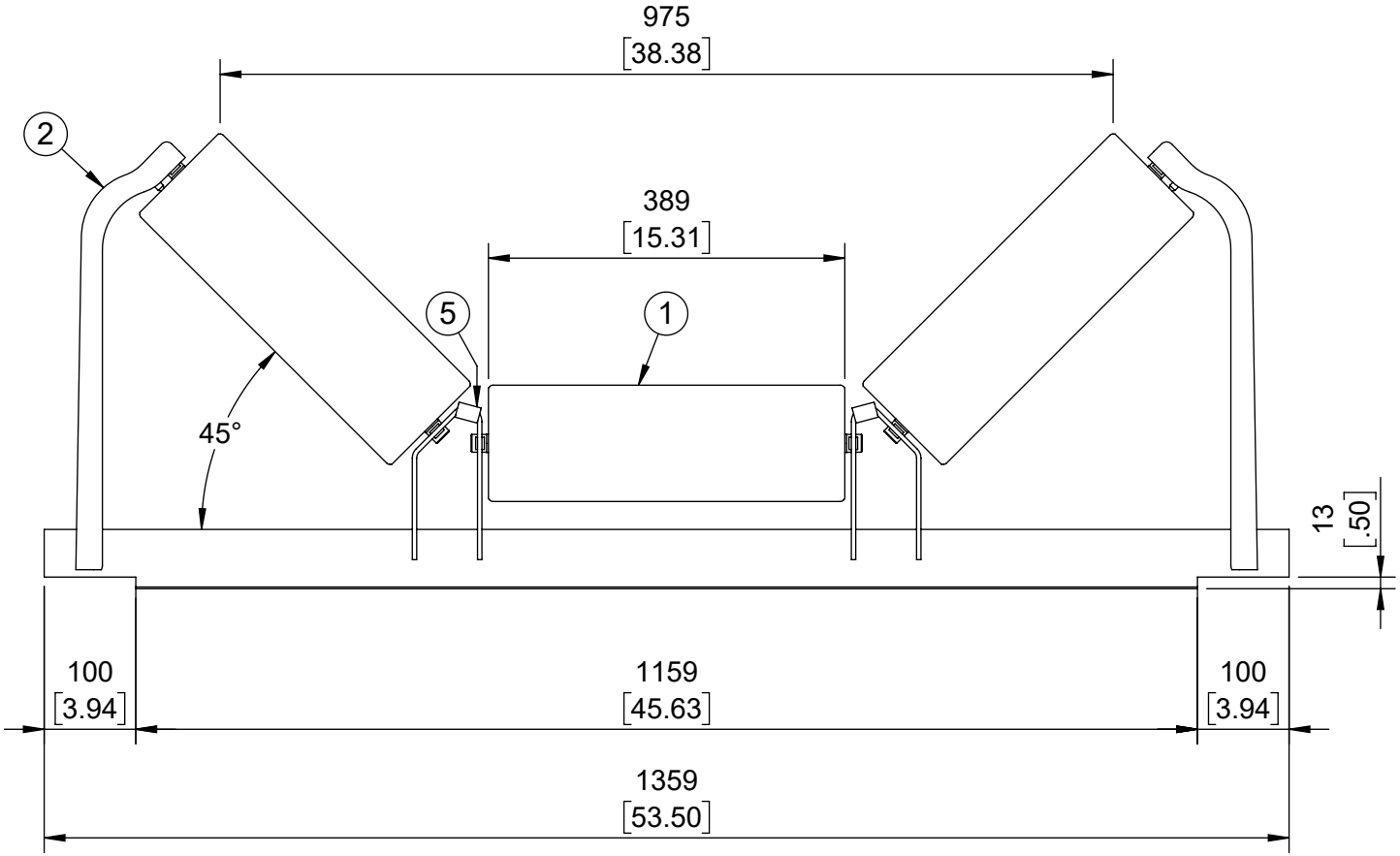

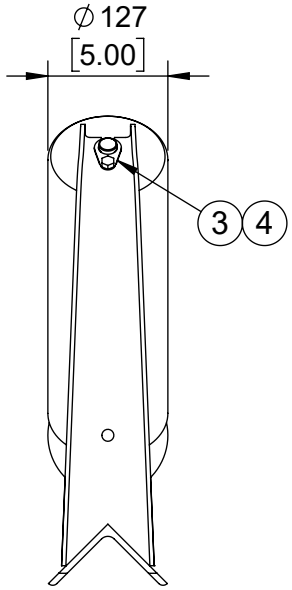

No.	REVISIONS	DATE	BY
0	ÉMIS POUR LA CONSTRUCTION	01-09-2025	AH

DO NOT SCALE
NE PAS PRENDRE A L'ECHELLE

DIMENSIONS ARE IN mm [INCHES]

SURFACE FINISH

SURFACE

THIRD ANGLE PROJECTION
PROJECTION TROISIEME ANGLE

This drawing is the exclusive and confidential property of Continental Conveyor and Machine Works Ltd.

Ce dessin est la propriete confidentielle et exclusive de Convoyeur Continental et Usinage Ltee.

Drawn/Dessine	Checked/Verifie	Approved/Approuve	Napanee Job No./Contrat No.
AH			
Date (MM-DD-YYYY) 01-09-2025	Scale/Echelle 1:8	Weight/Poids Net 97.2 Lbs	Thetford Job No./Contrat No.

Identification No.

continental

CONTINENTAL CONVEYOR & MACHINE WORKS LTD.
CONVOYEUR CONTINENTAL & USINAGE LTEE.
THETFORD MINES, QUEBEC, CANADA
NAPANEE, ONTARIO, CANADA

STANDARD

STATION SUPÉRIEURE, TYPE PESEUR, SANS PIED. AUGE 45°
LARGEUR DE BANDE 42" ROULEAU Ø5" ARBRE Ø20mm 30,000 SÉRIE

Format.	Drawing No./Dessin No.	Revision
A	BB-34D45-5-42	0